AD-3208 DELAY

COPYRIGHT 2003 BY SCOTT SWARTZ, ALL RIGHTS RESERVED

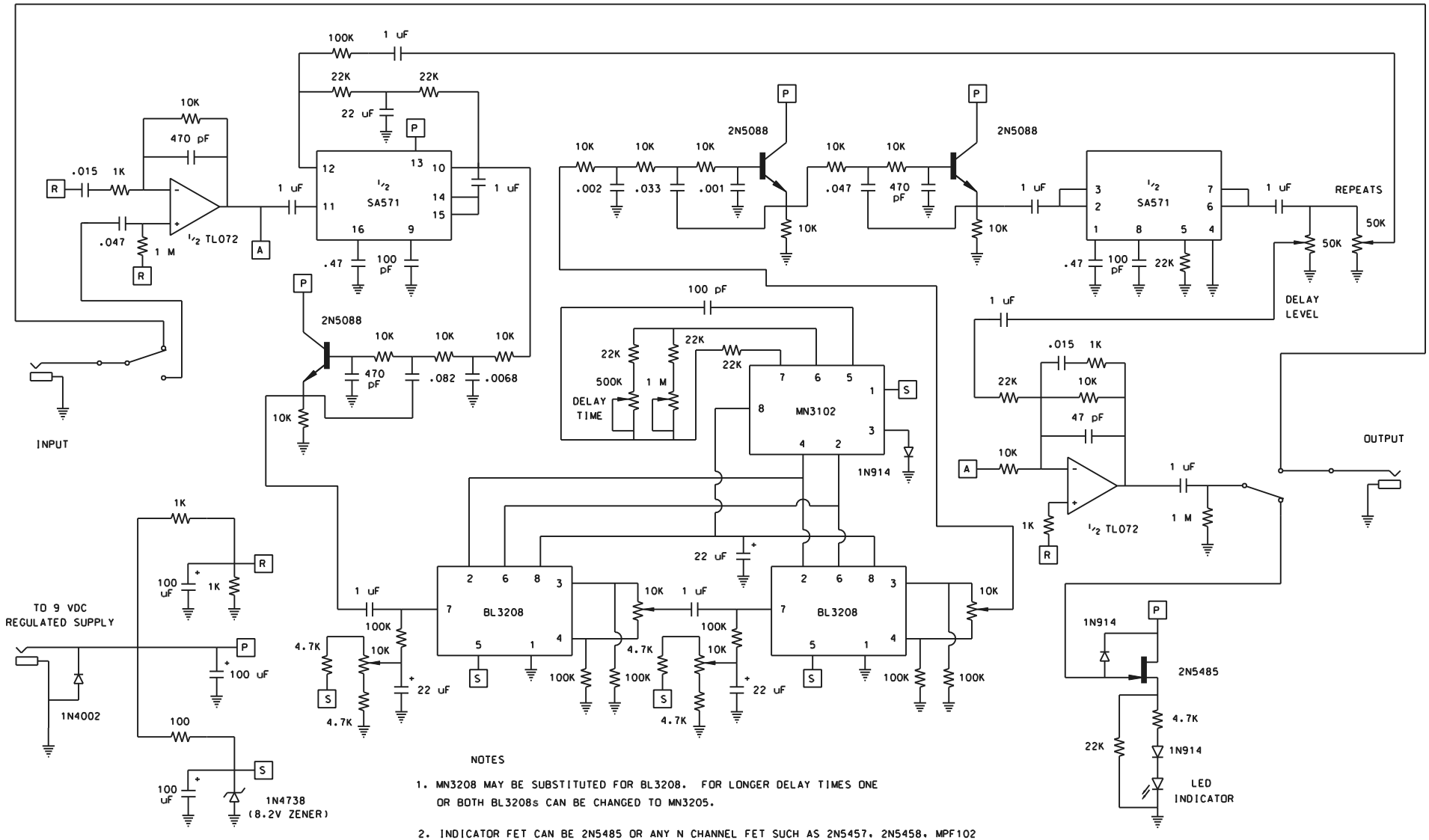

NOTES

1. MN3208 MAY BE SUBSTITUTED FOR BL3208. FOR LONGER DELAY TIMES ONE OR BOTH BL3208s CAN BE CHANGED TO MN3205.

2. INDICATOR FET CAN BE 2N5485 OR ANY N CHANNEL FET SUCH AS 2N5457, 2N5458, MPF102 CAN BE SUBSTITUTED.

3. COMPANDER IS SHOWN AS SA571; NE570 MAY BE SUBSTITUTED.